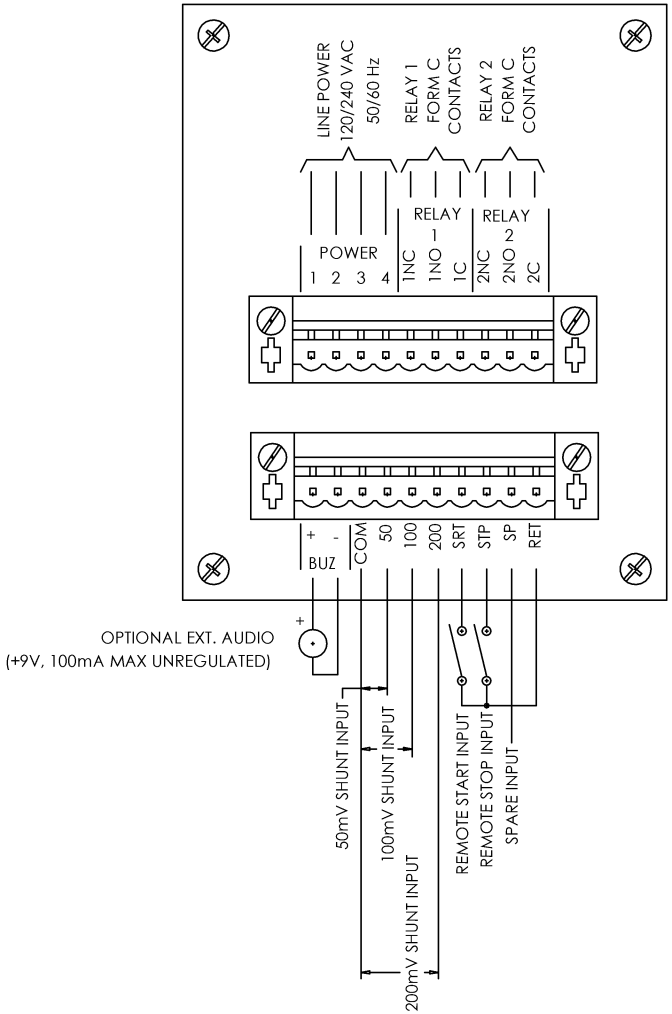

POWER CONNECTIONS

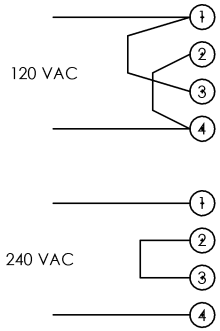

NOTE: WE RECOMMEND THE USE OF A QUENCH ARC ON EVERY MECHANICAL RELAY AND SOLENOID IN THE SYSTEM. USE PAKTRON PART NO. 104M06QC100 OR EQUIVALENT.

ENCLOSURE HARDWARE	RECOMMENDED MATING HARDWARE
PHOENIX CONTACT DFK-MSTB2.5/10-G-5.08 TERMINAL BLOCK	PHOENIX CONTACT MSTB 2.5/10-ST-5.08 PLUG

TOLERANCES UNLESS OTHERWISE SPECIFIED

ALL DIMENSIONS ARE IN INCHES

PATH = E:\CC\DT910\910PB11.SLDDRW

JPC CONTROLS 102 COMPASS PT. DR. STE. D, ST. CHARLES, MO 63301 (636) 946-3300 Fax (636) 724-2492 www.jpccontrols.com

PROCON MODEL 910P DIGITAL AMP/TIME METER WIRING DIAGRAM

APPROVAL		DWN BY	DATE	SCALE	CHKD BY
ENG	DATE	MPJ	05/18/01	NONE	
QA	DATE	SHEET 1 OF 1	12	091005	20 01